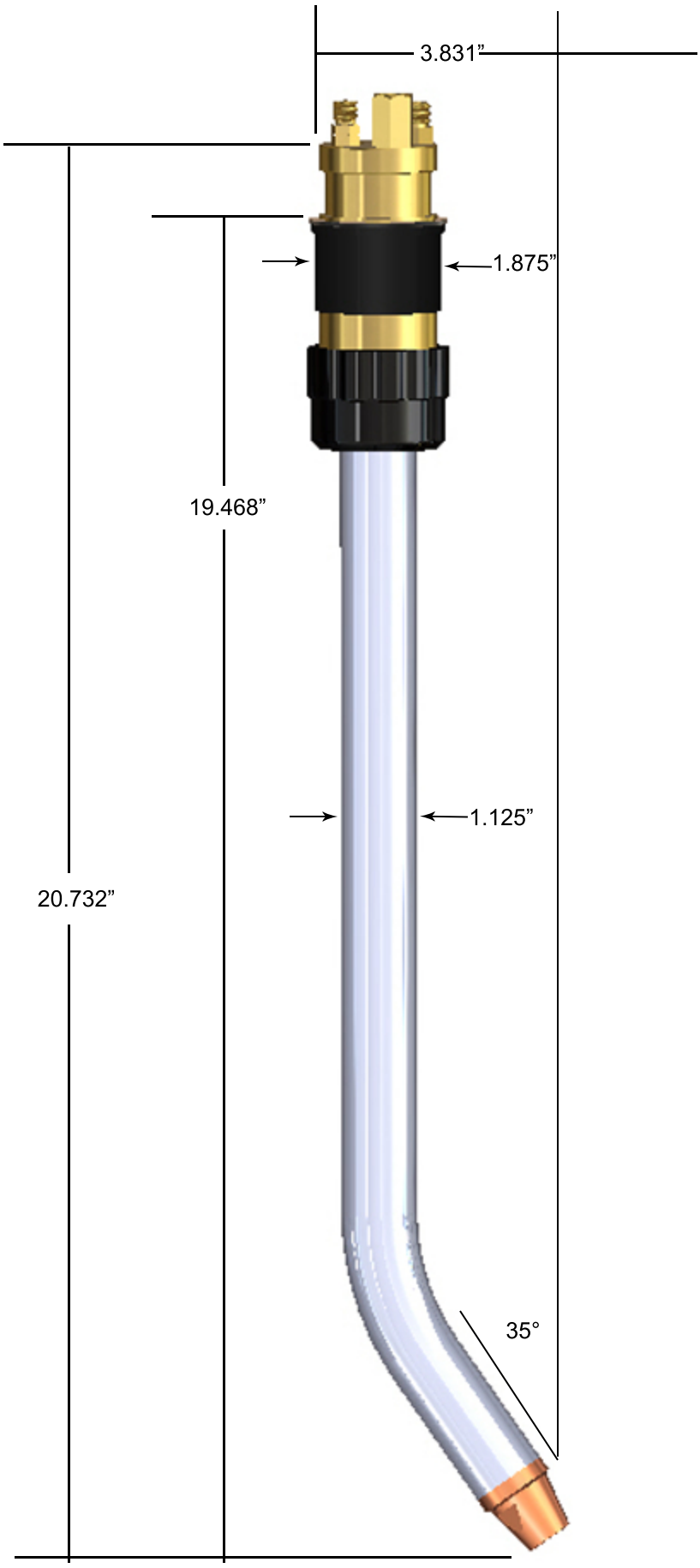
3.831”
1.875”
19.468”
1.125”
20.732”
35°